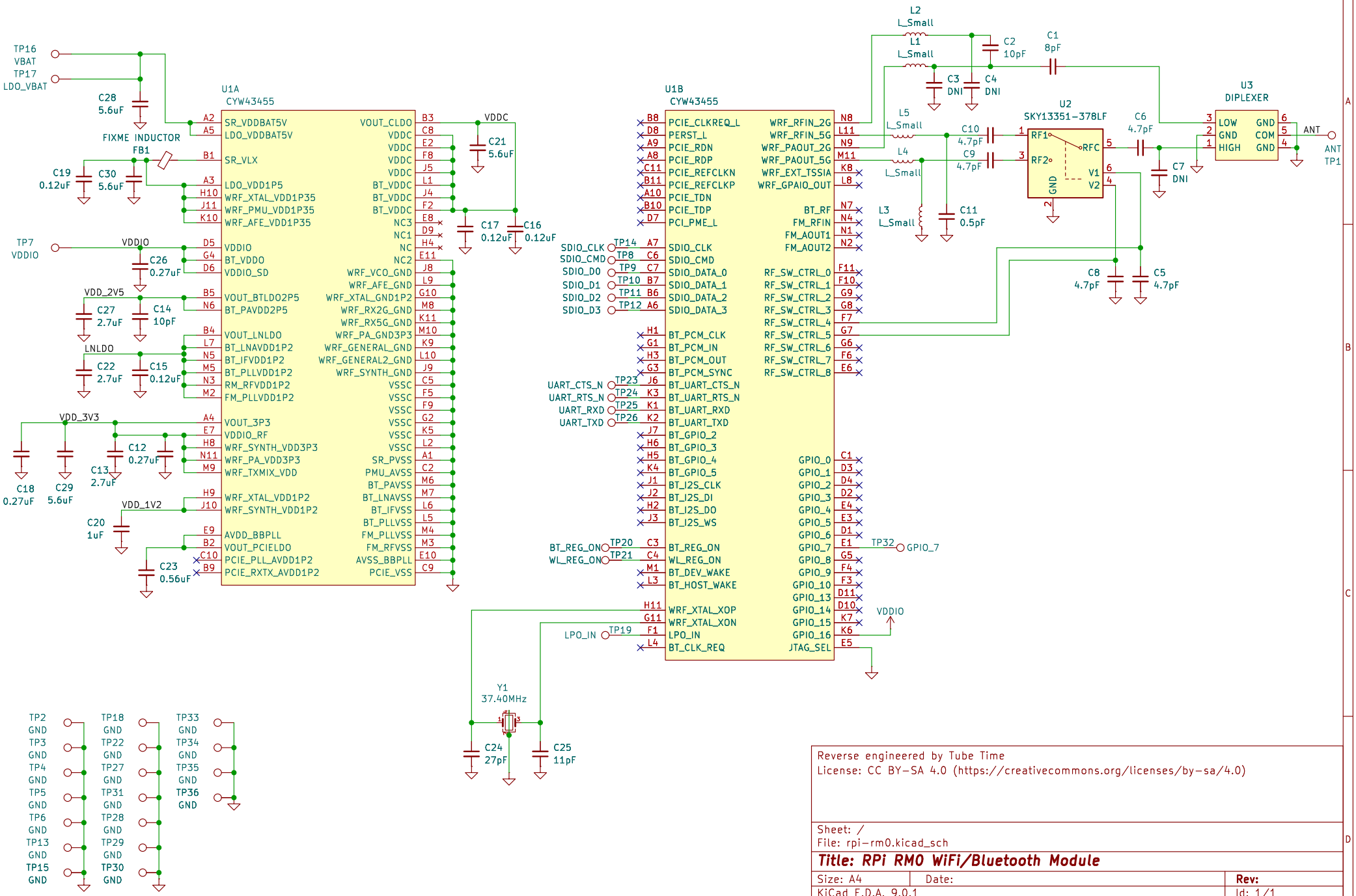

Reverse engineered by Tube Time
License: CC BY-SA 4.0 (https://creativecommons.org/licenses/by-sa/4.0)

Sheet: /
File: rpi-rm0.kicad_sch

Title: RPi RM0 WiFi/Bluetooth Module

Size: A4	Date:	Rev:
KiCad E.D.A. 9.0.1		Id: 1/1